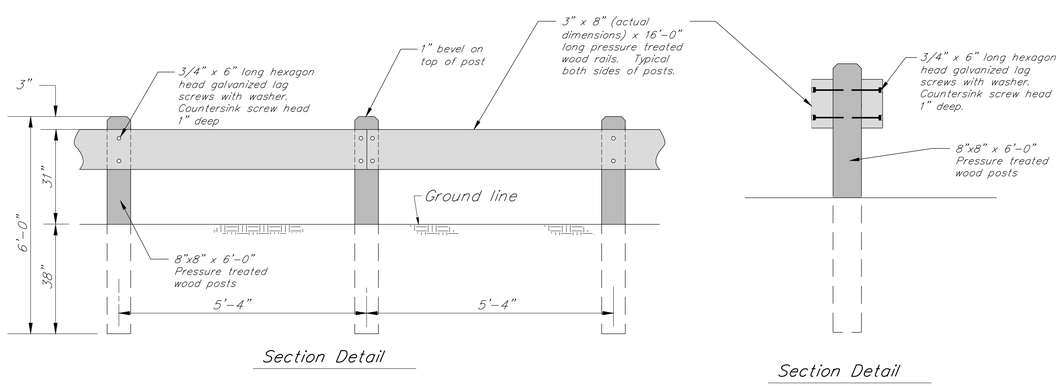

Section Detail

Section Detail

Guide Rail Detail

N.T.S.

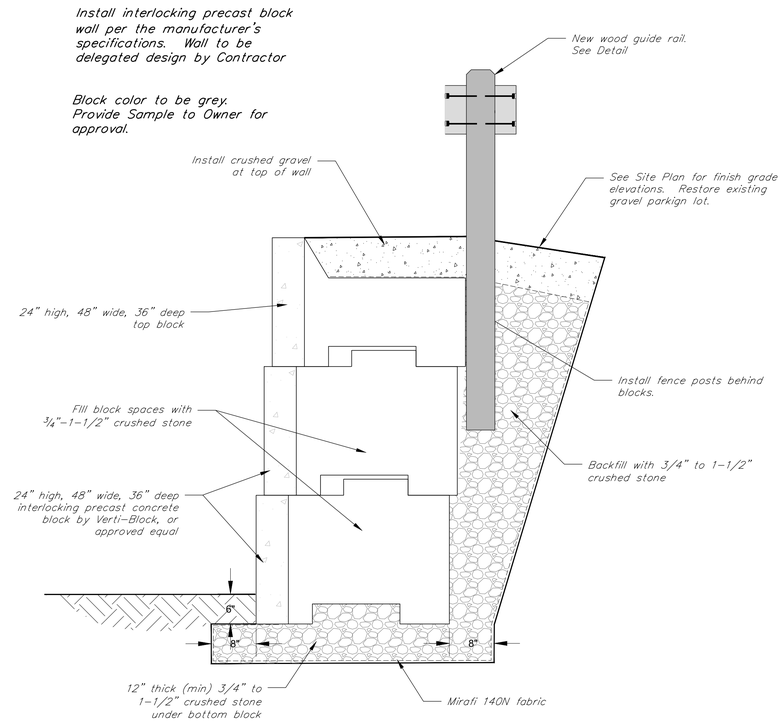

Verti-Block Precast Concrete Interlocking Wall Detail

N.T.S.

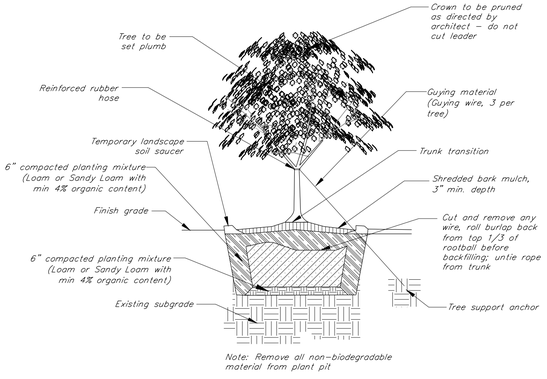

Tree Planting in Landscape Detail

N.T.S.

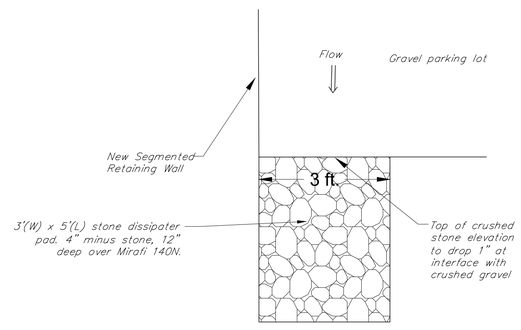

Energy Dissipater Pad

N.T.S.

KREBS & LANSING
CONSULTING ENGINEERS
164 Main Street, Suite 201
Colchester, Vermont 05446
P: (802) 878-0375
www.krebsandlansing.com

STAMP:

Project:

22 Depot Street
Mixed Use Addition

Richmond, Vermont

Project No.	22280
Scale	not to scale
Drawn by	TJB
Checked by	
Date	04/27/2023

Revisions

No.	Date	Description
1	06/23/2023	guide rail to replace chain link fence

Drawing Title

Civil Details

Drawing No.

C-4.4

22280\DWGS\22280 base.dwg