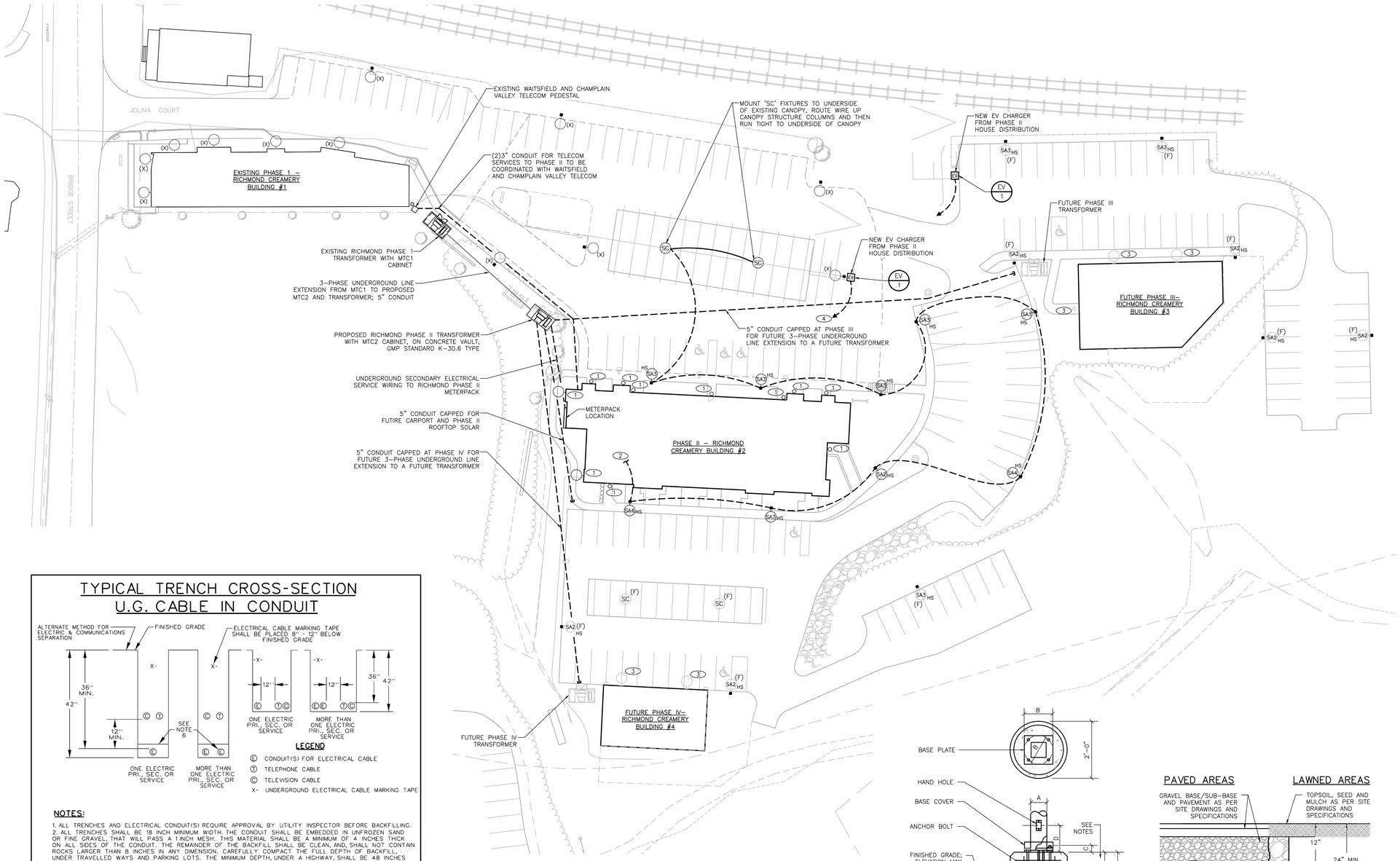

PROJECT NORTH

ELECTRICAL SITE PLAN

SCALE: 1"=30'-0"

TYPICAL TRENCH CROSS-SECTION U.G. CABLE IN CONDUIT

NOTES:

1. ALL TRENCHES AND ELECTRICAL CONDUIT(S) REQUIRE APPROVAL BY UTILITY INSPECTOR BEFORE BACKFILLING.
2. ALL TRENCHES SHALL BE 18 INCH MINIMUM WIDTH. THE CONDUIT SHALL BE EMBEDDED IN UNFROZEN SAND OR FINE GRAVEL, THAT WILL PASS A 1 INCH MESH. THIS MATERIAL SHALL BE A MINIMUM OF 4 INCHES THICK ON ALL SIDES OF THE CONDUIT. THE REMAINDER OF THE BACKFILL SHALL BE CLEAN, AND, SHALL NOT CONTAIN ROCKS LARGER THAN 8 INCHES IN ANY DIMENSION. CAREFULLY COMPACT THE FULL DEPTH OF BACKFILL, UNDER TRAVELLED WAYS AND PARKING LOTS. THE MINIMUM DEPTH, UNDER A HIGHWAY, SHALL BE 48 INCHES RATHER THAN 36 INCHES. MOUNDING THE TRENCH, TO PROVIDE THE REQUIRED DEPTH, IS NOT ALLOWED.
3. CONDUIT SHALL BE ENCASED IN A 4 INCH ENVELOPE OF CONCRETE UNDER THE FOLLOWING CONDITIONS:
   A) BROOK CROSSINGS.
   B) CROSSINGS OF WATER, SEWER, AND GAS PIPELINES. CROSSINGS SHALL BE DONE AT NINETY DEGREES IF POSSIBLE. NORMALLY, THE ELECTRICAL CONDUIT SHALL BE A MINIMUM OF 18 INCHES ABOVE THE PIPE. CAREFULLY COMPACT THE FILL BELOW THE ELECTRICAL CONDUIT. CONCRETE ENCASEMENT IS REQUIRED FOR 10 FEET ON EACH SIDE OF THE PIPE.
   C) UNDER THE TRAVELLED WAY OF CITY STREETS, AND, UNDER TOWN HIGHWAYS, IF REQUIRED BY THE TOWN. A PIPE SLEEVE, SURROUNDING THE CONDUIT, MAY BE SUBSTITUTED.
   D) CONDUITS WITHIN 20 FEET OF TANKS CONTAINING FUELS, OR SOLVENTS. THESE TANKS MAY BE ABOVE OR BELOW GRADE. THIS REQUIREMENT DOES NOT APPLY TO URD SERVICES.
4. TRENCHES SHOULD BE LOCATED 10 FEET FROM ANY STRUCTURE, UNLESS THE CONDUIT IS GOING TO THE STRUCTURE. CONTACT THE UTILITY IF CLOSER APPROACHES ARE NECESSARY.
5. TRENCHES SHOULD BE LOCATED 10 FEET FROM ANY WATER, SEWER, OR GAS PIPELINE THAT PARALLELS THE CONDUIT. CONTACT THE UTILITY IF CLOSER APPROACHES ARE NECESSARY.
6. COMMUNICATIONS CABLES AND CONDUITS MAY BE LOCATED IN THE SAME TRENCH WITH ELECTRIC CABLES OR CONDUITS. A MINIMUM HORIZONTAL OR VERTICAL SEPARATION OF 12 INCHES IS REQUIRED. ELECTRICAL CONDUITS SHALL BE SEPARATED BY 4 INCHES. THESE DISTANCES ARE MEASURED SURFACE-TO-SURFACE, NOT CENTER-TO-CENTER.
7. DEPTHS SHALLOWER THAN 36 INCHES MAY BE ALLOWED WHERE OBSTRUCTIONS SUCH AS LEDGE ARE ENCOUNTERED. ANY PORTION OF THE CONDUIT SHALLOWER THAN 24 INCHES SHALL BE COVERED WITH A MINIMUM 2 INCH CONCRETE CAP. SEE THE UTILITY FOR DEPTHS SHALLOWER THAN 12 INCHES.
8. CHECK WITH THE LOCAL UTILITY FOR SPECIFIC REQUIREMENTS.

THIS DETAIL APPLIES TO 3-PHASE UNDERGROUND UTILITY SERVICE EXTENSION WIRING AND TO UNDERGROUND SECONDARY ELECTRIC SERVICE WIRING

VERMONT UTILITIES
ELECTRIC SERVICE REQUIREMENTS

DRAWN: LAW	DATE: 11-11-12
APPRVD: WS	DATE: 11-11-12
DRAWING No.: 203	PAGE: 1
DATA BASE No.: DTW01893d	

DRAWINGS/STANDARDS/VERMONT

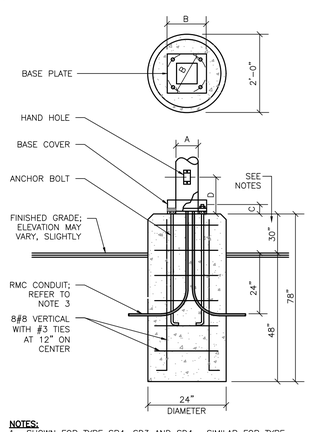

NOTES:

1. SHOWN FOR TYPE SB4, SD3 AND SD4. SIMILAR FOR TYPE SE3, EXCEPT ONLY 2" EXPOSED ABOVE GRADE.
2. SIMILAR FOR ELECTRIC VEHICLE CHARGING STATIONS ("EV") EXCEPT ONLY 6" EXPOSED ABOVE GRADE.
3. REFER TO LIGHT POLE MANUFACTURER FOR A, B, C AND D DIMENSIONS AND ANCHOR BOLT SIZE.
4. CONDUIT/SLEEVES IN BASE SHALL BE 1" GALVANIZED STEEL RIGID METAL CONDUIT (RMC).
5. PROVIDE RUBBED FINISH ON ALL EXPOSED CONCRETE SPACES.
6. CENTER BASE PLATE/ANCHOR BOLT PATTERN IN CENTER OF CONCRETE BASE.
7. CONTRACTORS OPTION TO PROVIDE PRECAST CONCRETE BASE OF SIMILAR PROPORTION IN LIEU OF SITE-BUILT CONCRETE BASE. IF PRECAST, **PROVIDE PRODUCT INFORMATION SUBMITTAL FOR APPROVAL.**

TYPE SA LIGHT POLE CONCRETE BASE DETAIL

NOT TO SCALE

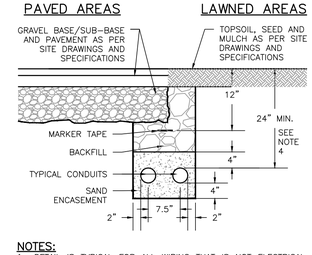

NOTES:

1. DETAIL IS TYPICAL FOR ALL WIRING THAT IS NOT ELECTRICAL SERVICE POWER WIRING.
2. COMPLY WITH OSHA TRENCH PROTECTION REQUIREMENTS.
3. PROVIDE CONDUIT SPACERS/SADDLES EVERY 6 FEET.
4. BURIAL DEPTH IS SHOWN FOR DIRECT BURIAL PVC RIGID NON-METALLIC CONDUIT. WHERE SPECIFIED BURIAL DEPTH IS NOT POSSIBLE, UTILIZE GALVANIZED STEEL RIGID METALLIC CONDUIT. NOTIFY ENGINEER PRIOR TO ANY CHANGE OF WIRING METHODS.
5. **DETAIL IS TYPICAL INSTALLATION; PROVIDE QUANTITY OF CONDUITS AS REQUIRED FOR THE INSTALLATION AND AS DIRECTED IN THE PLANS AND DETAILS.**

TYPICAL ELECTRICAL DUCTBANK DETAIL

NO SCALE

GENERAL NOTES:

THESE GENERAL NOTES APPLY TO ALL ELECTRICAL DRAWINGS.

1. FOLLOW ALL APPLICABLE CODES AND USE GOOD ELECTRICAL CONSTRUCTION PRACTICES WHEN DETERMINING TYPES OF WIRING METHODS AND SIZING OF CONDUCTORS AND CONDUIT. INSTALL ALL POWER, CONTROL AND SIGNAL WIRING USING METHODS AS FOLLOWS:

1.1. UNDERGROUND: INDIVIDUAL CONDUCTORS INSTALLED IN SCHEDULE 40 PVC RIGID NON-METALLIC CONDUIT (RNC) FOR DIRECT BURIAL; TRANSITION TO GALVANIZED STEEL RIGID METAL CONDUIT (RMC) WHERE CONDUIT RISES TO BE EXPOSED ABOVE GRADE OR CONCRETE SLAB, FROM A MINIMUM 24" BELOW TOP OF FINISHED GRADE OR SLAB. REFER TO TRENCH DETAIL FOR SERVICE ENTRANCE WIRING.

1.2. EXPOSED, EXTERIOR WIRING: INDIVIDUAL CONDUCTORS IN GALVANIZED STEEL RIGID METALLIC CONDUIT (RMC)

1.3. CONCEALED FEEDERS AND BRANCH CIRCUITS: MULTI-CONDUCTOR METAL CLAD (TYPE MC) CABLE OR INDIVIDUAL CONDUCTORS IN ELECTRICAL METALLIC TUBING (EMT)

1.3.1. NON-METALLIC (TYPE NM) CABLE MAY BE UTILIZED WITHIN APARTMENT UNITS, CONTAINED WITHIN THE UNIT. NM CABLE IS NOT ALLOWED TO PENETRATE THROUGH THE 1 HOUR OR GREATER FLOOR ASSEMBLY OR WALL ASSEMBLY.

1.3.2. WHERE PENETRATIONS THROUGH (BOTH SIDES) OF A 1 HOUR OR GREATER FLOOR OR WALL ASSEMBLY IS NECESSARY, ANY NM CABLE SHALL TRANSITION TO MC CABLE OR INDIVIDUAL CONDUCTORS IN EMT.

1.1. EXPOSED BRANCH CIRCUITS AND FEEDERS: INDIVIDUAL CONDUCTORS IN ELECTRICAL METALLIC TUBING (EMT)

1.2. CONNECTIONS TO VIBRATING EQUIPMENT IN DRY LOCATIONS SHALL BE INDIVIDUAL CONDUCTORS IN FLEXIBLE METALLIC CONDUIT (FMC); DAMP OR WET LOCATIONS OR EXTERIOR SHALL BE LIQUID TIGHT FLEXIBLE METALLIC CONDUIT (LTFMC). MAXIMUM 3' LENGTHS.

1.3. CONTRACTOR SHALL CONSULT WITH ENGINEER REGARDING QUESTIONS REGARDING WIRING METHODS PRIOR TO ROUGH-IN OF WIRING.

1.4. MINIMUM CONDUCTOR SIZE SHALL BE 12 AWG. PROVIDE AN INSULATED GROUND CONDUCTOR WITHIN ALL CABLES AND RACEWAYS.

2. CIRCUITS SHALL BE 20A1P, (2#12, 1#12G) 1/2"C. OR CABLE, UNLESS INDICATED OTHERWISE.
3. ALL WIRING SHALL BE ROUTED CONCEALED AND ALL DEVICES AND OUTLETS SHALL BE FLUSH MOUNTED IN FINISHED SPACES, TO THE GREATEST EXTENT POSSIBLE. WHERE WIRING IS ROUTED EXPOSED, IT SHALL BE RUN NEATLY, IN LINE WITH (PERPENDICULAR TO OR PARALLEL TO) BUILDING SURFACES.
4. MINIMUM 1" CONDUIT UNDERGROUND FOR SITE.
5. MOUNT LIGHTING CONTROL SWITCHES 48" ABOVE FINISHED FLOOR TO TOP, WITHIN 6" OF THE LATCH SIDE OF THE DOOR, UNLESS OTHERWISE INDICATED.
6. ALL LIGHTING LAYOUTS AND EXACT LOCATION OF LUMINAIRES SHALL BE CHECKED AT CONSTRUCTION TIME AND PRIOR TO INSTALLATION WITH OTHER TRADE'S LATEST DRAWINGS AND EQUIPMENT LAYOUTS.

6.1. LUMINAIRES MOUNTED ON SURFACE METAL RACEWAY WITH SHALLOW BOXES MAY REQUIRE BACK PLATE MOUNTING TRIM. REFER TO ARCHITECTS MOUNTING DETAIL.

7. CONNECT EMERGENCY AND EXIT LUMINAIRES TO THE UNSWITCHED PORTION OF THE LIGHTING CIRCUIT SERVING THE SPACE.
8. MOUNT RECEPTACLE DEVICES 18" ABOVE FINISHED FLOOR, UNLESS OTHERWISE NOTED. MOUNT RECEPTACLE DEVICES SUCH THAT THEY ARE ORIENTED SO THE GROUND IS IN THE "UP" POSITION. "AC" INDICATES MOUNTING 8" OVER COUNTER BACK SPLASH, APPROXIMATELY 44" ABOVE FINISHED FLOOR. **ALL RECEPTACLES SHALL BE TAMPER PROOF STYLE.**

8.1. ENSURE RECEPTACLE PLACEMENT THROUGHOUT THE UNITS MEETS CODE REQUIREMENTS AS A MINIMUM.

9. WHERE MECHANICAL EQUIPMENT IS INDICATED ON PLAN WITHOUT LOCAL DISCONNECT, EITHER IT IS FURNISHED WITH THE EQUIPMENT OR IS INDICATED IN THE EQUIPMENT WIRING DIAGRAM AND EQUIPMENT SCHEDULE. REFER TO MECHANICAL EQUIPMENT SCHEDULE AND WIRING DIAGRAMS FOR CONNECTIONS TO CONTROL DEVICES. WHERE MECHANICAL EQUIPMENT IS SHOWN WITHOUT HOMERUN, REFER TO PANEL SCHEDULES.
10. CIRCUIT APARTMENT LIGHTING, DEVICES AND EQUIPMENT AS PER PANEL SCHEDULES AND DRAWING NOTES.

DRAWING NOTES:

THESE DRAWING NOTES APPLY TO THIS DRAWING, ONLY.

1. BUILDING MOUNTED LUMINAIRES SHOWN FOR REFERENCE. SEE LIGHTING PLANS FOR FURTHER INFORMATION.
2. TO EXTERIOR LIGHTING CONTROLS IN BUILDING II.
3. 'FUTURE' EXTERIOR MOUNTED BUILDING LIGHTS.
4. PROVIDE CIRCUIT TO POWER EV CHARGING STATION FROM HOUSE PANELS IN BUILDING II.

ELECTRICAL LEGEND:

	SEE LUMINAIRE SCHEDULE FOR LUMINAIRE TYPES
	HOMERUN TO PANEL INDICATED
	BRANCH CIRCUIT OR FEEDER WIRING
	UNDERGROUND WIRING
HS	HOUSE SHIELDS
(X)	EXISTING, TO REMAIN
(F)	FUTURE
EV	ELECTRIC VEHICLE CHARGING STATION
	CEILING MOUNT LUMINAIRE OUTLET, TYPE AS INDICATED, REFER TO LIGHTING PLANS
	BUILDING MOUNT LUMINAIRE OUTLET, REFER TO LIGHTING PLANS
SA	POLE MOUNT LUMINAIRE, TYPE AS INDICATED

PROGRESS PRINTS
NOT FOR CONSTRUCTION
04/13/2023

Engineering Services of Vermont, LLC
www.ENGINEERINGVERMONT.com
5430 Waterbury Stowe Road, 2nd Floor
Waterbury Center, Vermont 05677
(802) 882-8449
9 Washington Street,
Rutland, Vermont 05701
(802) 855-8091
CONSULTING ENGINEERS
MECHANICAL - ELECTRICAL

NO.	ISSUED FOR	DATE

GRISTMILL BUILDERS
5430 WATERBURY-STOWE RD., WATERBURY CTR., VT

RICHMOND CREAMERY BUILDING #2

ELECTRICAL SITE PLAN

PROJ NO:	22037W
DRAWN:	CLD
DATE:	00/00/0000

E1