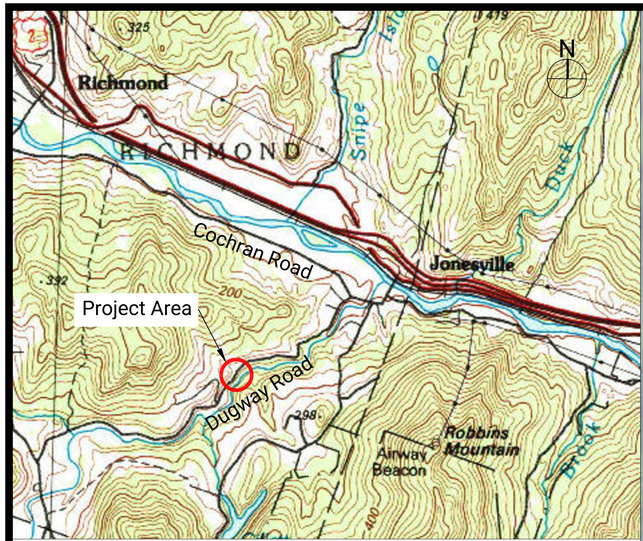

SITE LOCATION MAP

SCALE: NOT TO SCALE

GENERAL NOTES:

1. EXISTING FEATURES NOTED IN lowercase letters. PROPOSED IMPROVEMENTS NOTED IN CAPITAL LETTERS.
2. APPROXIMATE TOPOGRAPHY BASED ON LIDAR INFORMATION FROM STATE OF VERMONT OPEN GEODATA PORTAL "VT DATA - LIDAR 1FT CONTOURS" DATED 12/12/2018 AND FIELD MEASUREMENTS BY EAST ENGINEERING. APPROXIMATE PROPERTY LINES ARE BASED ON TAX MAP INFORMATION AND ASSUMED 3-ROD (49.5') RIGHT-OF-WAY.

CONSTRUCTION NOTES AND SPECIFICATIONS:

1. UNLESS OTHERWISE NOTED/SHOWN, ALL WORK SHALL FOLLOW THE "PUBLIC IMPROVEMENTS STANDARDS & SPECIFICATIONS FOR THE TOWN OF RICHMOND", LATEST REVISION.
2. STREAM BY-PASS SHALL BE INSTALLED TO DIVERT WATER AROUND EXCAVATION AREA. IF TURBID, WATER SHALL ENTER EROSION PREVENTION AND SEDIMENT CONTROL DEVICES. NO TURBID WATER TO BE DISCHARGED FROM SITE TO TRIBUTARY.
3. TRAFFIC CONTROL SHALL BE MAINTAINED BY THE CONTRACTOR AT ALL TIMES AND SHALL MEET TOWN, VTRANS, AND MUTCD STANDARDS. 1-LANE SHALL BE OPENED AT ALL TIMES DURING CONSTRUCTION. 2-LANES MUST BE OPEN AT THE END OF EACH WORKING DAY.
4. INLET HEADWALL/WINGWALL CAN BE EITHER CAST-IN-PLACE CONCRETE OR PRE-CAST CONCRETE. EITHER OPTION SHALL BE SET ON A MINIMUM OF 12" OF 1" COMPACTED CRUSHED STONE.
   - 4.1. IF CAST-IN-PLACE CONCRETE OPTION IS SELECTED, CONTRACTOR SHALL FOLLOW THE DETAIL ON THIS SHEET.
   - 4.2. IF PRE-CAST CONCRETE OPTION IS SELECTED, HEADWALL/WINGWALL SHALL BE MANUFACTURED BY CAMP PRE-CAST, OR APPROVED EQUAL. HEADWALL SHOP DRAWINGS SHALL BE SUBMITTED BY THE MANUFACTURER FOR REVIEW PRIOR TO CASTING. ANNULAR SPACE BETWEEN CORRUGATED METAL PIPE AND PRECAST OPENING SHALL BE GROUTED (FULL DEPTH) WITH HIGH-STRENGTH, NON-SHRINK GROUT. TEMPERATURE DURING AND THREE DAYS AFTER GROUTING SHALL BE A MINIMUM OF 40°F.
5. ON-SITE GRANULAR MATERIAL EXCAVATED DURING DEMOLITION TO BE UTILIZED FOR BACKFILL, UNLESS MATERIAL IS DEEMED UNSUITABLE BY ENGINEER. BACKFILL SHALL BE COMPLETED IN MAXIMUM 1' LOOSE LIFTS AND MECHANICALLY COMPACTED. NO EVIDENT PUMPING/RUTTING SHALL BE OBSERVED AFTER EACH LIFT IS COMPACTED.

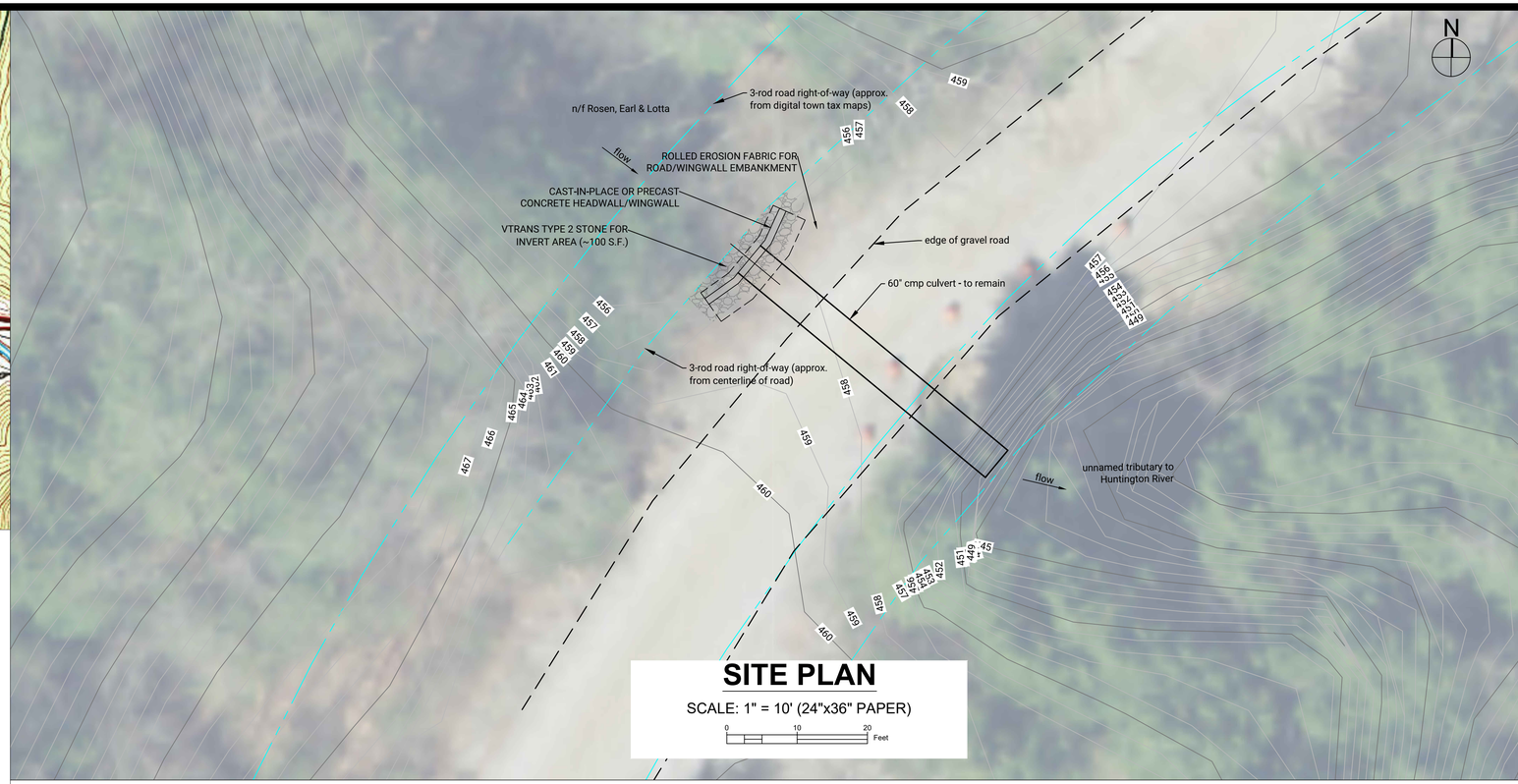

SITE PLAN

SCALE: 1" = 10' (24"x36" PAPER)

0 10 20 Feet

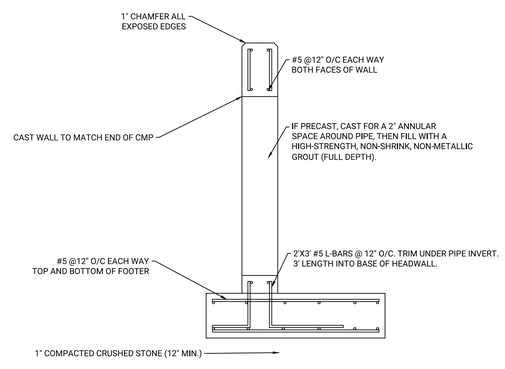

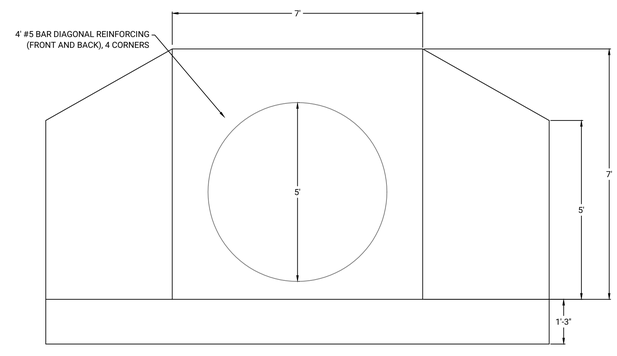

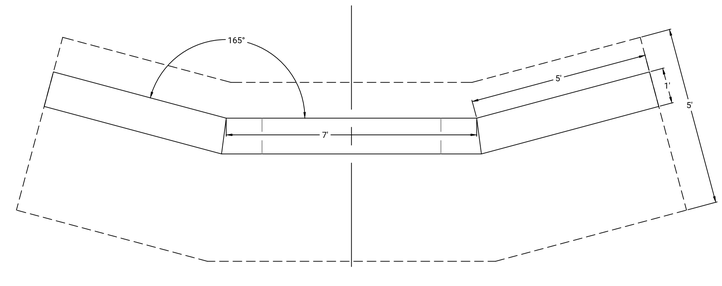

HEADWALL SECTION, ELEVATION, PLAN VIEW DETAILS

SCALE: 1" = 2' (24"x36" PAPER)

0 2 4 Feet

EAST ENGINEERING
CIVIL INFRASTRUCTURE

HINESBURG, VERMONT 05461
(802) 989-6686
WWW.EASTENGINEERINGPLC.COM

STATE OF VERMONT — TYLER D. BILLINGSLEY — NO. 69581 CIVIL — LICENSED PROFESSIONAL ENGINEER

THIS DRAWING MAY NOT BE ALTERED IN ANYWAY WITHOUT THE WRITTEN CONSENT OF THE STAMPING ENGINEER

DRAWING COPYRIGHT © 2020

OWNER:
TOWN OF RICHMOND
203 BRIDGE STREET
RICHMOND, VT 05477
(802) 434-5170

PROJECT:
DUGWAY ROAD IMPROVEMENTS

ISSUED FOR:
BID & CONSTRUCTION

ISSUED DATE:
2020-02-18

PROJ. #: 006-12

REVISIONS

#	BY:	DATE:

SITE PLAN, DETAILS, AND SPECIFICATIONS

DRAWING NO:
C-1.0