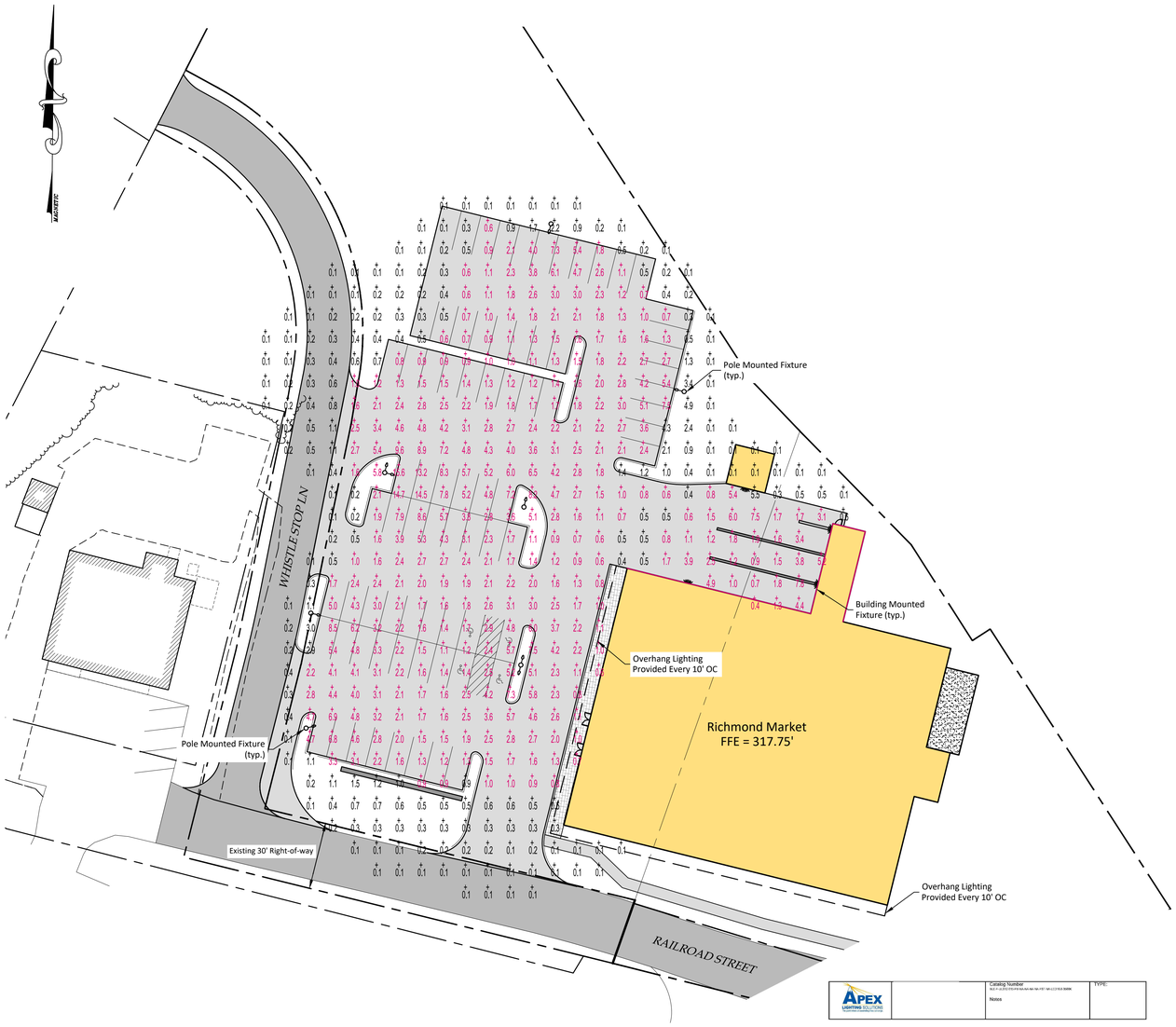

CALCULATION SUMMARY							
AREA NAME	DIMENSIONS	GRID NAME	AVE	MAX	MIN	MAX/MIN	AVE/MIN
SITE PLAN	10'x10'	MARKET	2.6	14.6	0.6	20.0	4.0

LUMINAIRE SCHEDULE							
TYP	SYMB.	DESCRIPTION	LAMP	LUMENS	MOUNTING	LLF	QTY
BLDG		WPLED26–BUILDING MOUNTED LIGHT	30W	3,666	15' BUILDING MOUNT	1.00	4
AREA		ALED4T78Y–AREA LIGHT	77W	10,504	20' POLE MOUNT	1.00	10

***NOTE:** LIGHTING VALUES SHOWN IN RED HAVE BEEN USED TO CALCULATE THE UNIFORMITY RATIO, WHILE LIGHTING VALUE SHOWN IN BLACK HAVE BEEN SHOWN TO SHOW OVERALL COVERAGE.

OWNER/APPLICANT

Noyes Properties, LLC
PO Box 42
Richmond, VT 05477

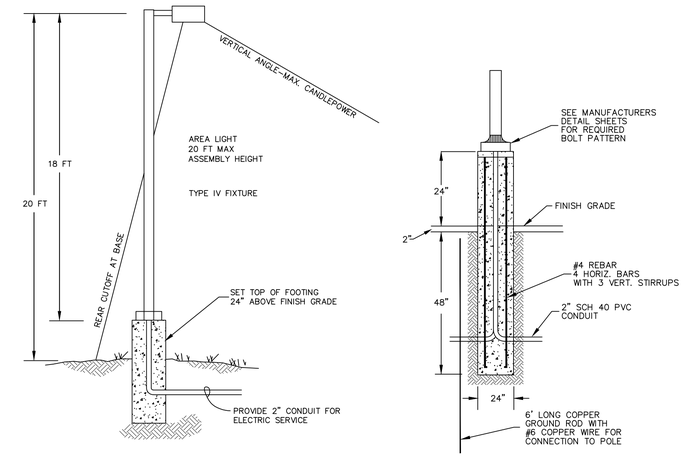

TYPICAL LIGHT POLE DETAIL

NTS

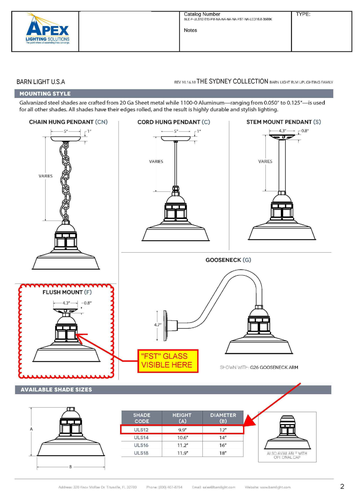

OVERHANG MOUNTED FIXTURE

NTS

BUILDING MOUNTED FIXTURE

NTS

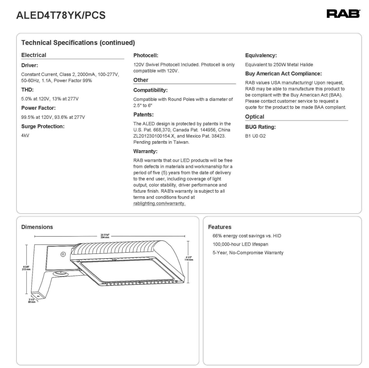

POLE MOUNTED FIXTURE

NTS

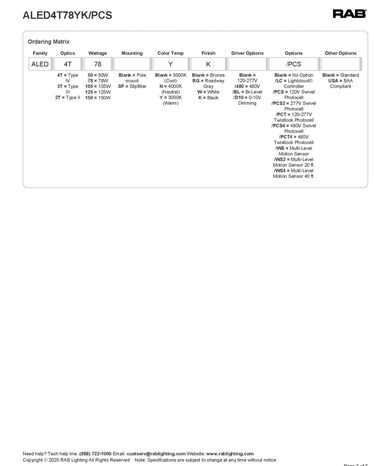

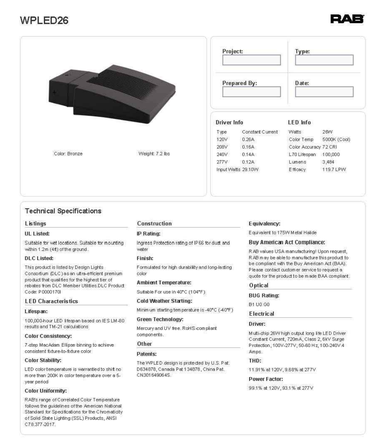

GRAPHIC SCALE

30 0 15 30 60 120

(IN FEET)
1 inch = 30 ft.

STATE OF VERMONT
BRIAN W. CURRIER
No. 018.0114132
PROFESSIONAL ENGINEER

9-16-21	REDUCED PARKING DOWN TO 75 SPACES		BWC
DATE 8-30-21	REVISION ADDED LIGHTING SPECIFICATION FOR UNDERNEATH 5' OVERHANG ON SOUTH AND WEST SIDES OF BUILDING	BY	BWC
SURVEY OBCA	☐ RECORD DRAWING ☐ PRELIMINARY	DATE	3-18-21
DESIGN BWC	■ FINAL ☐ SKETCH/CONCEPT	JOB#	2019-03
DRAWN BWC	O'LEARY-BURKE CIVIL ASSOCIATES, PLC	FILE	S13
CHECKED PJO	13 CORPORATE DRIVE ESSEX JCT., VT PHONE: 878-9990 FAX: 878-9989 E-MAIL: obca@olearyburke.com	PLAN SHEET #	4
SCALE 1"=30'	Richmond — Vermont		

Lighting Plan